SHREDDERS & CRUSHERS

TYRANNOSAURUS® series

T880X

WASTE
REFINING
SOLUTIONS

BMH TECHNOLOGY

Over 250 plant deliveries around the world

1 Renewable

BMH DESIGNS AND BUILDS solutions for recycling, material recovery, renewable energy and recreation of raw materials.

2 Future

WE WANT TO BE an integral part of building greener and cleaner future globally.

3 Together

WE WORK TOGETHER with our customers and enable them to succeed in their businesses and environmental targets. This we do together within BMH as a team.

We create solutions for waste to be reborn as raw materials and renewable energy.

We have decades of experience in waste processing and biomass handling.

BMH TECHNOLOGY bmh.fi

TYRANNOSAURUS®
Waste Shredders & Biocrushers

T660X series
Pre-shredder
for MSW & ICW

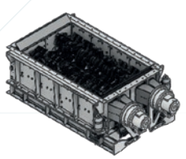

T770X series
Main shredder
for ICW & MSW

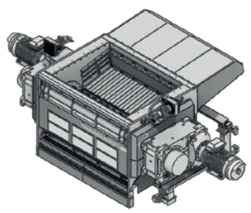

T880X series
Main shredder
for MSW & ICW

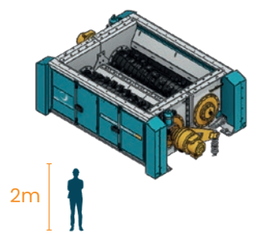

T990X series
Main shredder
for ICW & MSW

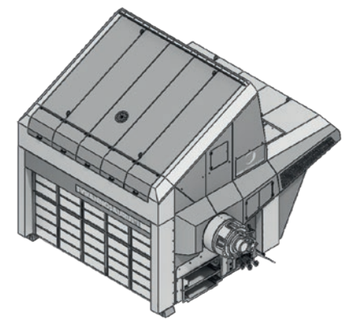

T750X series
Post-screening
over-size shredder
for ICW & MSW

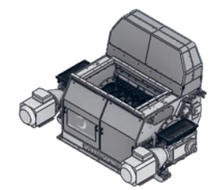

T120X series
Fine shredder
for sorted and
pretreated waste

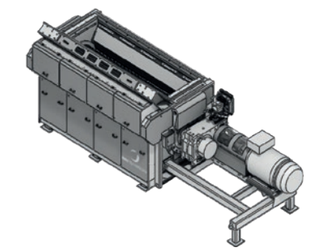

All our rotors have spiral knife arrangement. This means maximized power for each cutting event.

We have delivered more than 270 stationery shredders since 1980.

T902X series
Main crusher
for wood-based biomass

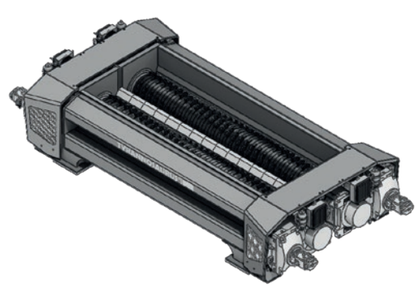

T65XX series
Post-screening
over-size crusher
for wood-based biomass

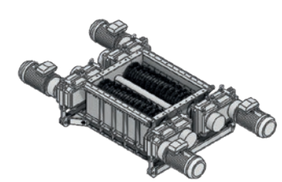

TYRANNOSAURUS® Shredders and BioCrushers are the core of our expertise. They are the outcome of long experience in material handling combined with outstanding engineering skills. TYRANNOSAURUS® Shredders and BioCrushers represent smart technology, raw power and excellent availability with high capacity.

bmh.fi

MSW = Municipal Solid Waste **ICW** = Industrial and Commercial Waste

Waste

Biomass

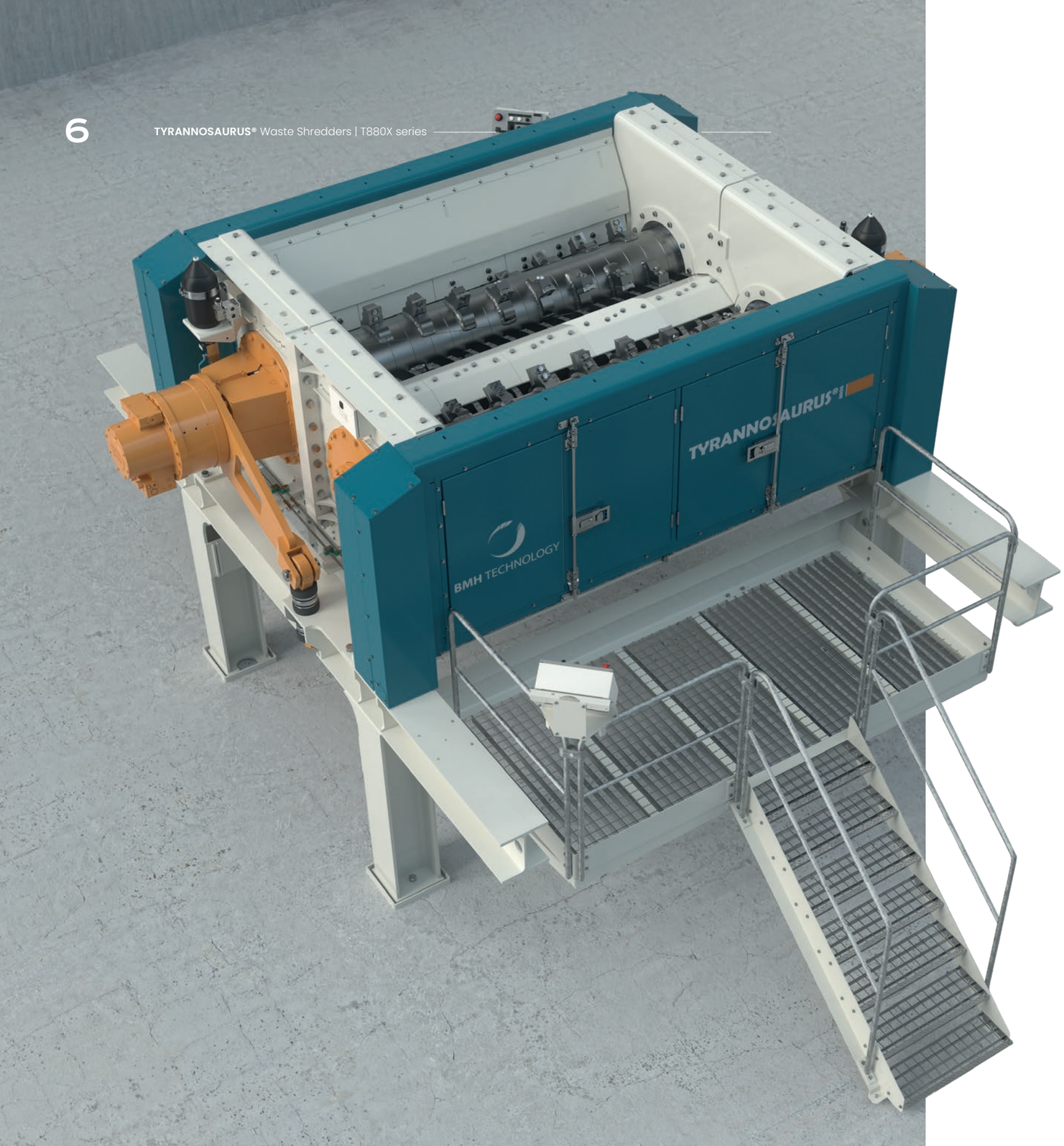

A unique combination of two rotors, in-built screens and advanced knife philosophy.

T880X series

Excellent price-performance ratio for MSW

T880X SERIES is a slow-rotating two-rotor shredder with an in-built screen designed for industrial scale shredding of unsorted MSW.

1

EVEN AND CONTROLLED output particle size of 80–200 mm with high capacity.

2

EASY MAINTENANCE and removal of un-shreddable items enable low operating expenses.

3

THE T880X SERIES is available with hydraulic or electric drive unit.

4

TYPICAL APPLICATIONS for the T880X series shredders are:

- Effective preshredding for waste-to-energy plants
- Alternative fuel for cement kilns
- RDF for high-efficiency boilers

Strong and versatile all-around shredder.

T880X series represents industrial scale raw power.

T880X series delivers high long-term capacity.

We have optimized the shredder's knife geometry for MSW.

LET TYRANNOSAURUS® SHOW ITS TEETH.

Designed to perform

THE T880X SERIES is designed for shredding unsorted municipal solid waste (MSW) that is collected from households. It mostly includes everyday items such as packaging materials and organic waste.

Occasional difficult materials will not break the shredder. Materials it tolerates in small amounts:

- Bricks
- Carpets
- Mattresses
- Metal scrap
- Rocks
- Scrap tires

1 **T880X SERIES** is ideal for shredding unsorted municipal waste but can also handle specific types of ICW.

High-power performance

THE LONG-TERM CAPACITY is generated by average hourly capacity and uptime hours. When it comes to T880X, we have focused on both factors.

T880X series is capable of delivering high average capacity because

- High power (264–400 kW) enables also reserve, which is needed for heterogenous feedstock.
- The shredding geometry has been optimized from several aspects:
  - The knives pull the material in, yet they are still able to release it after shredding. Minimized wire and rope wrapping due to rotor geometry.
  - Knife resistance for wear and fracturing due to material and shape design.
  - Even load on the rotor thanks to spiral knife arrangement.
  - Full focus on knife functionality, zero focus on appearance.

OPTIONAL INTEGRATED FEEDER INCREASES THE CAPACITY UP TO 20–30%. SEE PAGE 21.

T8805 90% P<200mm and **98%** P<300mm

T8805 90% P<80mm and **98%** P<160mm

INDICATIVE DIAGRAM OF T8805 CAPACITY. PERFORMANCE GUARANTEES ARE CASE-SPECIFIC.

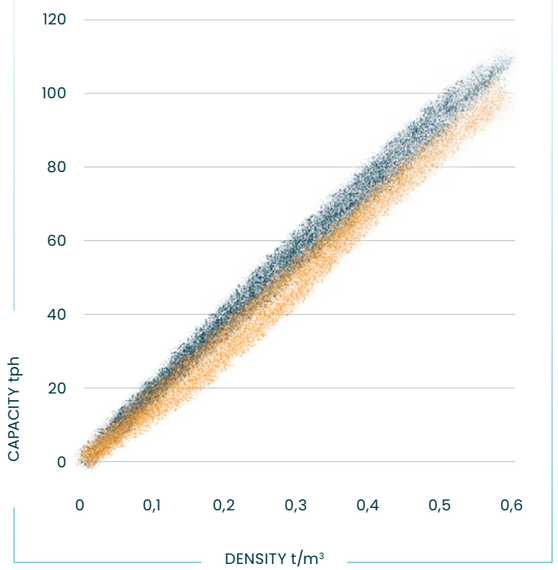

Optimized OPEX & rapid maintenance by advanced knife philosophy

WE'VE IDENTIFIED the counter knives as a major factor for operative expenses (OPEX). Thus, our focus has been on optimizing this element by combining the pros of welding and exchange:

- The counter knife set can be rapidly exchanged into a spare one. The removed set can be rewelded in the workshop and reused multiple times. This reduces the downtime and also eliminates the risk of fire. However, the counter knives can be welded also in place if preferred.
- The knives are fast and easy to service. There is no need for the operator to go inside the hopper as therotor knives can be turned or changed through wide maintenance doors. Only standard tools are needed.
- In order to save costs, both ends of the knife can be utilized by turning the knife 180°.

THE COUNTER KNIVES CAN BE SWAPPED AND RECONDITIONED.

Alternatively available with weldable knives.

Changing the knives doesn't require cleaning the whole shredding chamber as no welding or grinding is needed.

THE KNIVES ARE FAST AND EASY TO SERVICE.

Our industrial scale solutions work in varying and challenging conditions.

Increased uptime by reduced frequency of shutdowns

TO REACH MAX UPTIME, BMH has focused not only on robustness but also on introducing relevant technologies.

Screen adjustment

The challenge of clogging in the in-built screens has been taken into account by introducing for instance the possibility to adjust the screen height, which allows the knives to swipe the screen.

Advanced removal technologies

In case unshreddable items occur, T880X reacts instantly. Impurities are easy to remove through the big doors without unloading the shredding chamber.

The patented inward-opening upper hatch system in T880X prevents waste from falling out of the hopper.

WE'VE ALSO OPTIMIZED max power (kW/shredding width) to enable sufficient reserve for maintaining the capacity with heterogenous feedstock.

The screen gap is easily adjustable, which improves throughput and increases capacity even with worn screens.

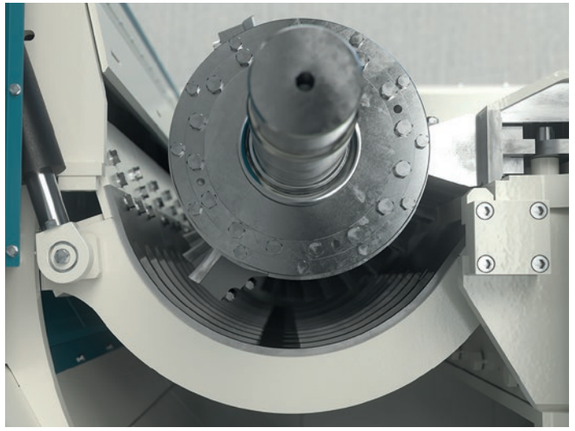

Reduced downtime by shortening the stops in operation

ALL MACHINES require maintenance stops. We've put plenty of effort on easy maintenance.

Big doors and hatches ensure that accessing the shredder is effortless. Cleaning, maintenance and replacement of spares take only a minimal amount of time and can be done with standard tools and knowledge. Operational hours can be used for the main function – shredding.

The shredder is protected by means of automation and mechanical protection when something hard faces the rotor.

Furthermore, safety standards have always been a priority in our products – it's not only about the downtime of the machine but the uptime of the people.

THE KNIVES ARE POSITIONED IN A SPIRAL SHAPE, WHICH PROTECTS THE DRIVE UNIT FROM HIGH-LOAD PEAKS.

The knives' material and shape have been optimized to endure wear and fraction.

PROS OF DRIVE TECHNOLOGIES

HYDRAULIC DRIVE

- Suitable for more challenging materials
- Built-in shock resistance
- Wider torque range
- Screen adjustment
- Advanced removal technologies

ELECTRIC DRIVE

- Lower OPEX
- Lower noise level
- Higher power efficiency

Feeders have been manufactured by BMH since 1997.

Most efficient feeding

THE MAXIMAL SHREDDING capacity can be achieved by always having an optimal amount of waste in the shredding chamber.

An automatic feeding system can increase the long-term capacity up to 20–30 % compared to manual feeding.

A consistent fuel supply is provided by the TYRANNOSAURUS® Feeder. It's a hydraulically operated automatic feeding system suitable for unsorted heterogenous materials of all sizes.

The optimal feeding flow rate is based on our long experience and an echo sounder that measures the waste level in the chamber.

The feeder can be fed by a grab crane, a front loader or directly from a truck.

Available models: 8m/12m 18m/24m

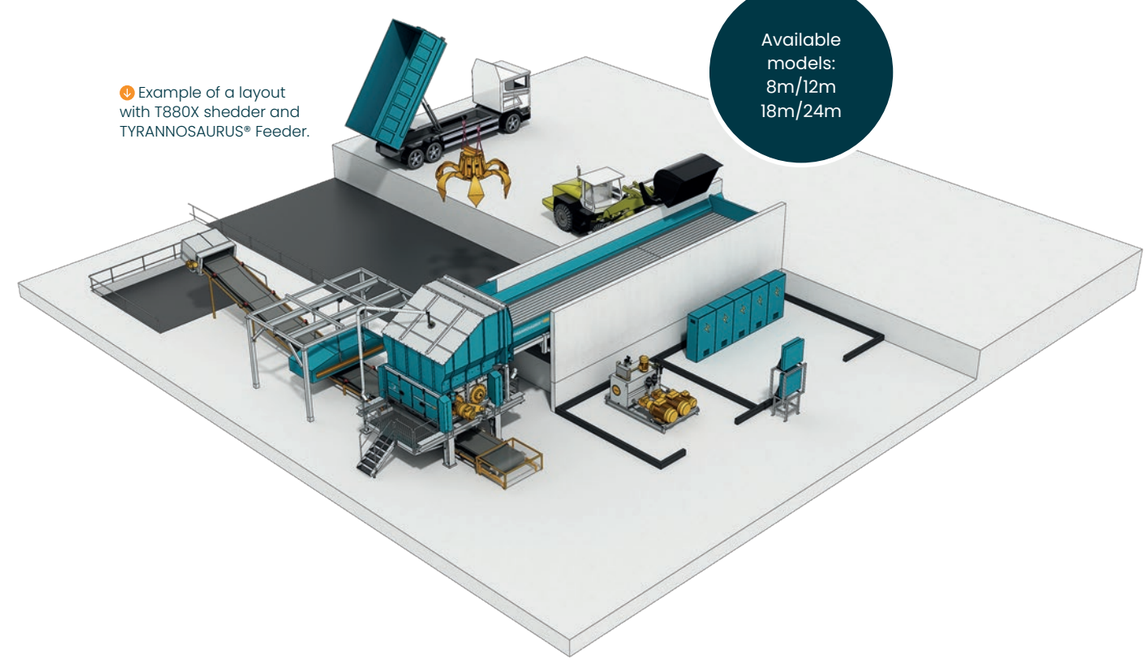

Example of a layout with T880X shedder and TYRANNOSAURUS® Feeder.

T880X series / Technical details

MODEL	T8804	T8805	T8806
MAIN DIMENSIONS (L x W x H) [mm]	5400 x 3100 x 1630	6100 x 3100 x 1630	6660 x 3100 x 1630
WEIGHT [t]	22	25	28
DRIVE POWER [kW]	264	320	400
DRIVE SYSTEM	HYDRAULIC/ELECTRIC	HYDRAULIC/ELECTRIC	HYDRAULIC
INFEED OPENING [mm]	2460 x 2170	2460 x 2730	2460 x 3290
NUMBER OF ROTORS	2	2	2
ROTOR LENGTH [mm]	2188	2748	3308
ROTOR DIAMETER [mm]	750	750	750
ROTATION SPEED [rpm, max]	ADJUSTABLE UP TO 60	ADJUSTABLE UP TO 60	ADJUSTABLE UP TO 60
ROTOR KNIVES [pcs]	23+23	28+28	33+33
COUNTER KNIVES [pcs]	4+4	5+5	6+6
CASSETTES + SCREENS [pcs]	8+4	10+5	12+6
CAPACITY [t/h, max]*	UP TO 70	UP TO 80	UP TO 90
TYPICAL OUTPUT PARTICLE SIZE [mm]	80–200	80–200	80–200
WIDTH OF OPTIONAL FEEDER [mm]	2400	2400	3200
AUXILIARY HYDRAULIC POWER UNIT(S) [kW]	14	14	14

* THESE INDICATIVE VALUES HAVE BEEN CALCULATED USING TYPICAL WASTE PROPERTIES. PLEASE SEE GRAPH ON P. 13.

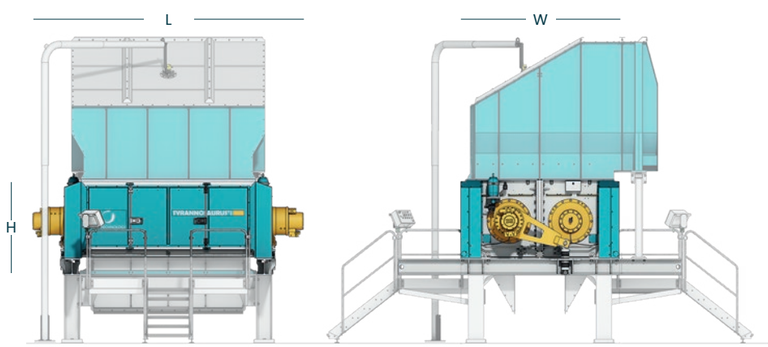

We design and build solutions for recycling, renewable energy and recreation of raw materials.

BMH TECHNOLOGY

Finnish cleantech company rooting back to 1929.

We create solutions for waste to be reborn as raw materials and renewable energy.

We offer material handling solutions for our customers who work towards carbon neutrality and a greener future. With our plant solutions, equipment and life cycle services they can reuse material previously seen merely as waste. We help our customers turn municipal, industrial, commercial and wood-based waste into raw materials and renewable energy. This answers to the needs of industrial, chemical and energy production as well as construction and infrastructure.

COMPLETE SOLUTIONS

STRONG REFERENCES

EXECUTION CAPABILITY

LOCAL SERVICE

Renewable future together.

bmh.fi

TYRANNOSAURUS®

MAKES STRONG SENSE